УДК 81’25

М. Бахледова[1]

ТЕХНИЧЕСКИЙ ПЕРЕВОД: РАЗРЫВ МЕЖДУ ТЕОРИЕЙ И ПРАКТИКОЙ

Цель статьи – дать представление о теории терминологии в контексте исследований в области перевода на основе обращения к реальной практике перевода, в частности техническому переводу. Автор попытается выявить диссонанс между академическими ожиданиями и неожиданными проблемами, с которыми сталкиваются переводчики в реальных ситуациях. Статья нацелена на определение источников проблем и поиск их системных решений. Автор статьи предлагает несколько путей решения конкретных проблем в области технического перевода.

Ключевые слова*: *технический перевод, терминология, некачественный исходный текст, методы перевода.

M. Bachledová

TECHNICAL TRANSLATION: THE GAP BETWEEN THEORY AND PRACTICE

The aim of this article is to provide an insight into the theory of terminology in the context of Translation Studies and compare it with actual practice in translation, in particular technical translation. We will try to reveal the dissonance between academic expectations and the unexpected problems translators encounter in real-life situations. The article tries to pinpoint the source of problems and propose a systemic solution, and also provide some trouble-shooting ideas.

Keywords*: *technical translation, terminology, substandard source text, translation methods

If we compared translation to a computer program, the theory would resemble a source code in the mind of the translator. The translator functions as a compiler program that transfers this source code into the set of commands to be executed. The translation as a product is what we see on the screen, unaware of the complicated sequence of decisions made, based on large amounts of information processed in order to make the program “happen”. It is not an accident that translation processes are often modelled as algorithms. However, the centre point around which translation studies ultimately revolve is communication.

Theories of communication and information have produced numerous models. Fig 1 shows the so-called “mother of all models”, the Shannon-Weaver Mathematical Model from 1949.

The efficiency of communication is logically restricted if the sender uses ambiguous code and/or the message lacks any context allowing for the wrong interpretation of the message. In order to achieve maximum clarity, it is necessary to identify the noise source and (in the ideal case) eliminate it. One of the scholarly disciplines that aim to facilitate communication is terminology.

What Eugen Wüster (1968), the father of terminology and a “*fierce proponent of unambiguous professional communication*” [2, p. 165], had in mind when he was designing what we now refer to as the General Theory of Terminology, was a way to harness the chaos and turn it into a clean and comprehensible system in order to facilitate efficient communication between professionals [2, p. 165].

The objectives of Wüster’s theory were to eliminate ambiguity by means of the standardization of terminology, convince users of technical languages that standardization is beneficial, and to establish terminology as a scientific discipline [2]. His theory is very prescriptive, however, to this day, remaining the “Bible” of terminological work. Table 1 sums up the ever-relevant components of the original theory and the nature of modulations of his theory that have emerged over decades of its existence.

[1] Доктор философии, философский факультет, Университет им. Матея Бела, г. Банска Быстрица, Словацкая Республика.

© Бахледова М., 2016.

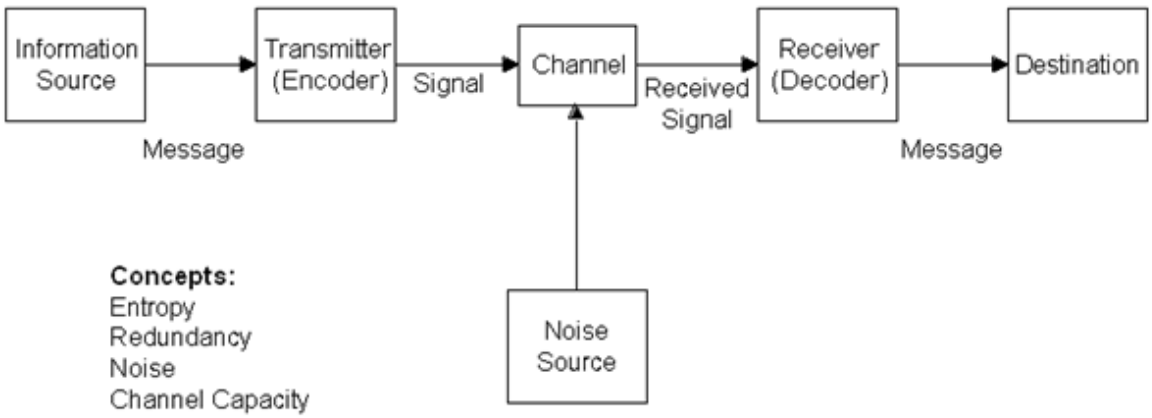

Fig. 1. Shannon-Weaver Mathematical Model, 1949[1]

Table1 [2]

Original components	**Modifications**
Priority of concept over the designation	Terminology development and language planning
Precision of the concept (monosemy)	Controlled synonymy is admitted
Semiotic conception of designations	Terminological units are studied from the point of view of phraseology
The need for prescription	Spoken forms are recognized in contexts of language planning
Deliberate control of evolution	
Priority of international designation forms	
Limitation to written forms	
Onomasiological approach	

In 2000, Rita Temmerman suggested that traditional terminology hampered the actual creation of the conceptual system, concluding that "*the interest in terminological research was hindered by the interest of standardisation*" [10, p. 15], since in practice, terms are often polysemantic and synonymic thus far removed from the ideal univocity. She criticises the objectivist approach applied in traditional terminology in which phenomena are studied in isolation, ignoring the human capacity to imagine and understand. In her view, Wüster's approach is dogmatic. The idea that terms can be stripped of their context and structured in an artificial system is opposed by a number of scholars such as H. Picht, R. Kocourek, Ch. Laurén, G. Rondeau and others (In: Temmerman, 2000). Temmerman presents her "*new propositions for terminology*" [10, p. 39] in four poins: (1) conceptualisation/categorisation, (2) naming or lexicalisation, (3) metaphorical models, and the (4) diachronic study of categories". Temmerman's approach is relevant mostly in the area of social and human sciences where terms are too evasive to be bound into precise systems of hyperonyms and hyponyms.

Wüster himself never published the General Theory of Terminology as a single complex work. Its fragments can be found in articles; however, the principles were eventually compiled and explained only by H. Felber, who collected and processed Wüster's lecture notes and posthumously published them as *Einführung in die allgemeine Terminologielehre und terminologische Lexikographie* in 1979 [2].

A specialized language (in contrast with general language) is used by a specific group of professionals to communicate information pertaining to a specific field. "*Technical writing is sometimes defined as simplifying the complex. [...] A significant subset of the broader field of technical communication, technical writing involves communicating complex information to those who need it to accomplish some task or goal*"[2]. The aim of communication between professionals is not meant to be incomprehensible to people outside the group, albeit there are commu-

[1] Source: http://wecommunication.blogspot.sk/2012/01/shannon-and-weaver-mathematical-model.html

[2] Source: http://techwhirl.com/what-is-technical-writing/

nicators who assume that the lower the readability of their message, the more professional they sound, while in fact, they merely unconsciously sabotage the communication process. Specialized languages are not self-regulatory, they need conscious administration in order to remain functional and up-to-date communication tools. It is important to understand the context in which this type of communication occurs: "*science and technology are the bases of economic and societal development, the interaction between language and economic activity is, in general terms, quite self-evident. It is increasingly recognized that the "relative strength" of the language of a given language community tends to reflect – after a certain time-lag – the economic performance of that language community*"[1].

The gap

The theory of terminology is very complex; the introduction we offered in the previous part of this paper is merely a very brief summary of its basic principles and their development. Now we will move on to the issue of the "ugly duckling" of translations – technical translation. Translators often perceive it as inferior, as there is little space to be creative or imaginative. However, as we have known since Edgar Allan Poe's painful revelation on the true nature of the artistic creation process in his *Philosophy of Composition* essay, a systematic approach and unemotional, almost mathematical computation when it comes to decision-making constitute the difference between professionalism and amateurism. However boring it may seem, technical translations constitute a large portion of the texts in the translation market and their processing requires a significant degree of expertise. Based on the research conducted by Martin Djovčoš [3], 62% of Slovak translators specialized in non-literary translation and 24% specialized in both non-literary and literary translation, which accounts for 76% of the translators in the Slovak translation market in 2012.

The gap between theory and practice in this case lies mainly within the quality of the source texts. The authors of the texts often use jargon instead of terminology, neglect to list and explain abbreviations, and even fail to meet grammatical and stylistic standards. The source texts often lack cohesion and/or coherence, which results in an increased cognitive burden. Clients sometimes provide texts in non-editable formats incompatible with computer assisted translation software. Their preparation for actual translation can be extremely time-consuming and the technical skills required to do so often exceed the average translator's competence. However, the translator is still expected to produce a high-quality output and it is often difficult to explain the extended amount of time required to cope with the above mentioned complications.

In the Slovak context, this situation may result from the notorious weakness of the Slovak educational system, which focuses on memorising information and tends to underestimate the fact that reasonable communication skills are absolutely essential. If a person is studying to become an engineer, it is expected that at some point of their professional life they will have to produce technical texts. "*The challenge for technical communicators is to ensure that all of the relevant information is indeed conveyed, but also that it is conveyed in such a way that readers can use the information easily, properly and effectively. Indeed, this aim is precisely the same as that of technical writing, which, rather unsurprisingly, forms the basis for technical translation in that it supplies the raw materials for translation activities*" [1, p. 209].

From the stylistic point of view, technical texts are supposed to be comprehensive, brief and cohesive. The biggest plight of technical texts is probably their faulty syntax, which needs to be analysed and reconfigured in the correct order before the actual translation process starts. Given that a translator (who at the same time is not an engineer) cannot possibly encompass all the knowledge a practicing engineer possesses in the field, the translator merely simulates the discourse [4]. Of course, they are required to comprehend the subject matter, but they are not required to actually carry out the engineering tasks in practice. On the contrary, the engineer as a creator of a technical text, is required not only to be an expert in the field, but also to be capable of talking about the subject matter. To paraphrase Roman Jakobson (1959) who claims that "*the faculty of speaking a given language implies the faculty of talking about this language*" [5, p. 26], we might assume that being an expert in a specific field gives one the faculty to speak about this field. This assumption is indeed correct; however the comprehensibility of such a discourse for outsiders is often very low. There are several possible explanations for this phenomenon:

Authors of technical texts may:

- not possess the ability to communicate on an adequate level;
- fail to recognize the importance of this ability;
- be unaware of the low quality of their texts.

For the translator, the semantic relationships within a text are often a guideline to understanding, whilst an expert possessing complex knowledge in a field can understand even faulty texts as far as

[1] Source: http://unesdoc.unesco.org/images/0014/001407/140765e.pdf

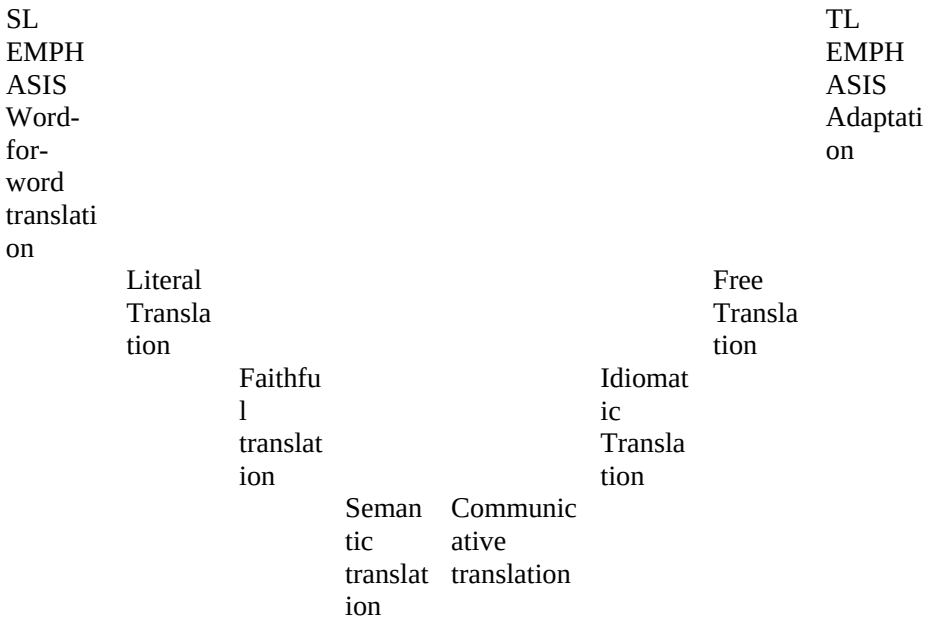

Fig. 2. The Methods [8, p. 242]

they contain correct terminology (or at least jargon). Since the translator may easily misunderstand the semantic relationships between elements in an erroneous syntactic construction, it can easily result in semantic errors in the translated text. Drawing from our own teaching and translation practice is indeed anecdotal, nevertheless, the substandard quality of the source texts intended for technical texts remains an everyday issue in the life of a translator. Before an extensive material research is carried out to provide a well-anchored conceptual approach and tackle this practical problem in a comprehensive way, we would like to provide a number of suggestions on how the substandard technical source text can be dealt with.

The gravely inaccurate perception of what translation is can be illustrated by our recent conference experience at which a speaker, who apparently lacked any knowledge on translation theory, argued that if we do not buy handmade boots, there is no reason to prefer human translation from a machine one either. As we already explained in the introductory part of the paper, translation is an extremely complicated mental process and so far, the attempts in substituting humans with a machine in the entire process have not been successful, which can be explained simply by the fact that translation as a "product" is not a tangible object, but a product of the human mind. Translation is a complex mental process in which the translator applies their extensive knowledge of several scholarly fields. As for machine translation, based on using a database of translation memories from previously translated texts, there are obvious limits, not to mention our inability to create an algorithm that would deal with all the decision processes in the same smooth manner, as the human brain does. The cognitive burden in creating a translation and in creating boots is incomparable. For a translator, it is extremely difficult to create a top quality product from a substandard source text, however possible.

Solution proposal

Here we would like to propose a few practical strategies to tackle the problem of substandard technical texts.

The easiest way to deal with substandard syntax is to ask the author for an explanation; however, the author of the text is rarely available for consultations, since they are rarely the sender of the text. Clients are not aware of the substandard quality of the source text nor are they interested in it.

Firstly, we strongly recommend the practical application of the Sequential Model by Daniel Gile [4], which operates on the premise that the translator has to verify the meaning of their hypothesis, and only confirm the translation if it passes the plausibility test. In other words, the translator is supposed to understand the source text at all times and cannot translate a unit if they are unable to interpret it. Therefore, they absolutely need interdisciplinary knowledge regarding the field underlying the text.

Fig. 2 shows translation methods proposed by Peter Newmark [8].

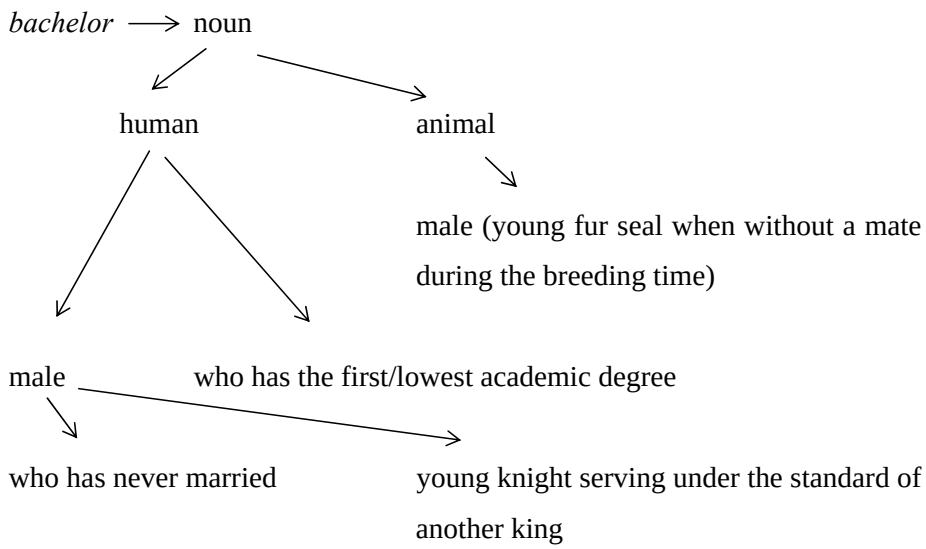

Fig. 3. Componential analysis [6, p. 53]

We are well aware of the fact that contemporary Translation Studies tend to disapprove of the prescriptivist approach popular in the 20th century; however, from the point of view of a practicing translator, we would strongly recommend Newmark as a great source of highly applicable advice.

We would like to comment on the actual purpose of a word-for-word translation, which is often misused. Its aim is to help the translator "*either understand the mechanics of the source language or to construe a difficult text as a pre-translation process*" [8, p. 242]. A word-for-word translation is generally not an acceptable method for application in the case of terminologically-saturated technical texts. According to Newmark, it is merely an auxiliary method used for the sake of better understanding the translator.

Newmark's typology is general, therefore most items in Fig. 1 deal with aspects pertaining to literary texts. However, the method of communicative translation, which "*attempts to render the exact contextual meaning of the original in such a way that both content and language are readily acceptable and comprehensible*" [8, p. 244] is a method that can be applied in the translation of technical texts.

As for Newmark's translation procedures, mainly transference as the transfer of a source language word into the target language text, are of interest. Cultural and functional equivalents are also acceptable in certain cases (e.g. the difference between the educational system in UK and the one in Slovakia). Descriptive equivalents are also acceptable if there is no direct equivalent [8].

A method known as a componential analysis pertaining to the field of structural semantics can also be employed to help us decipher the meaning of a translation unit on the lexical level. The principle of componential analysis is to decompose a single lexical meaning (sememe) into smaller semantic components (semes) as seen in Fig 2. Again, this step requires knowledge in the specific field.

Componential analysis can help the translator select the right meaning in case of ambiguity or if they seek a lexeme in a paradigmatic relation to the lexeme analysed. However, as Jesenská emphasizes, "*the semantic components are only our (= human) theoretical constructs*" [6, p. 53] and are to be perceived as such.

Jiří Levý's (1966) approach to translation as a decision process employs a strategy based on a similar principle that in this case draws from the Game Theory [7]. The components of a decision process are 1) situation, 2) paradigm and 3) choice. In case the paradigm is qualified, the translator works with a definitional instruction; if the translator has to choose from available alternatives, they work with a selective instruction. The method of investigating the terminal symbol has a generative pattern.

Syntactic reconfiguration is also a useful procedure if we encounter a text with faulty syntax. If faulty syntax hinders our understanding of the utterance, we can simply rewrite the sentence in the correct order and proceed to actual translation. It decreases the cognitive burden but also significantly extends the time period needed for translation.

Last but not least, a solution is to analyse the text beforehand and simply refuse to take the job if we are unable to guarantee the quality of our output.

Conclusion

As we could see, the available strategies mostly deal with the situation in which a translator does not understand a text due to the gaps in their own knowledge base; however this is somewhat detached from reality and based on an ideal default setting. Firstly, the automatic assumption that technical texts are created in compliance with relevant standards is wrong. Secondly, clients are unaware of the complexity of what they are demanding and fail to acknowledge that the source material they are providing is often of dubious quality. Thirdly, to engineers, technicians and other professionals who produce technical texts, it often does not occur that an outsider might struggle to comprehend their texts if they use jargon instead of actual terminology, and abbreviations which they do not bother to explain and are virtually impossible to decipher if they arise out of context. These are very real practical problems most translators encounter in their work. A systemic solution to the problem of substandard source texts would be to pay more attention to writing skills and content creation in all stages of the educational system, but it is hardly realistic to inspire it from the position of translators. However, we believe that the proposed partial strategies dealing with substandard technical texts can be helpful.

References

1. Byrne, J. *Technical Translation. Usability Strategies for Translating Technical Documentation.* – Dordrecht: Springer, 2006. – 280 p.

2. Cabré Castellví, T.M. *Theories of terminology*. In: *Terminology.* – 2003. – Vol. 9:2. – Pp. 163–199.

3. Djovčoš, M. *Kto, čo, ako a za akých podmienok prekladá: prekladateľ v kontexte doby.* – Banská Bystrica: Univerzita Mateja Bela, 2012. – 163 s.

4. Gile, D. *Basic Concepts and Models for Interpreter and Translator Training.* – Amsterdam & Philadelfia: John Benjamins, 1995. – 283 p.

5. Jakobson, R. *On Linguistic Aspects of Translation.* In: *Vybrané kapitoly z translatológie I.* – Banská Bystrica: FHV UMB, 2010. – Pp. 24–32.

6. Jesenská, P. Štulajterová, A. *Selected Chapters on English Lexical Semantics*. – Banská Bystrica, Bratia Sabovci, s.r.o., 2013. – 128 s.

7. Levý, J. *Translation as a Decision Process.* 1966. In: Biloveský, V., Djovčoš, M. Vybrané kapitoly z translatológie II. – Banská Bystrica: FHV UMB, 2013. – Pp. 242–268.

8. Newmark, P. *Translation Methods and the Other Translation Procedures*. 1988. In: Biloveský, V., Djovčoš, M. Vybrané kapitoly z translatológie II. – Banská Bystrica: FHV UMB, 2013. – Pp. 242–268.

9. Popovič, A. *Preklad ako komunikačný proces.* 1971. In: Biloveský, V., Djovčoš, M. Vybrané kapitoly z translatológie I. – Banská Bystrica: FHV UMB, 2010. – Pp. 133– 41.

10. Rita Temmerman. *Towards New Ways of Terminology Description: The Sociocognitive Approach*. 2000. – Amsterdam/Philadelphia: John Benjamins, 2000. – 258 p.

Internet sources

1. "Shannon and Weaver Mathematical Model." <http://wecommunication.blogspot.sk/2012/01/shannon-and-weaver-mathematical-model.html> Accessed on: 9-9-2015

2. Techwhirl. "Helping the world explore Content Management & Technical Communications." <http://techwhirl.com/what-is-technical-writing/> Accessed on: 10-9-2015

3. UNESCO. „*Guidelines for Terminology Policies.*" http://unesdoc.unesco.org/images/ 0014/001407/140765e.pdf Accessed on 20-10-2015